Panasonic ideas for life

SPEC FILE

Product Number : PT-**AR100**

Product Name : Full High-Definition Home Cinema Projector

As of December 2011. Specifications and appearance are subject to change without notice.

SFL11M009-1

Specifications

Main unit

Power supply		100–240 V AC, 50/60 Hz
Power consumption		350 W (0.08 W in standby mode)
LCD*1 panel	Panel size	18.7 mm (0.74 in) diagonal (16:9 aspect ratio)
	Display method	Transparent LCD panel (× 3, R/G/B)
	Drive method	Active matrix
	Pixels	2,073,600 (1,920 × 1,080) × 3, total of 6,220,800 pixels
Lamp*2		280 W UHM lamp
Lens		Manual zoom (1.33–2.69:1), manual focus lenses, F 2.0–3.4, f 21.5–43.0 mm
Projection size		1.02–7.62 m (40–300 inches)
Throw distance		1.11–17.45 m (3 ft 8 in to 57 ft 3 in)
Colors		Full color (1,073,741,824 colors)
Brightness*3		2,800 lumens*4
Center-to-corner uniformity ratio*3		85%
Contrast ratio*3		50,000:1*5 (full on/full off)
Resolution		1,920 × 1,080 pixels
Scanning frequency	RGB	f_H: 15 kHz–74 kHz, f_V: 24 Hz–85 Hz, dot clock: 154 MHz or lower
	YP_BP_R (YC_BC_R)	525i (480i): f_H 15.75 kHz; f_V 60 Hz,
		625i (576i): f_H 15.63 kHz; f_V 50 Hz,
		525p (480p): f_H 31.50 kHz; f_V 60 Hz,
		625p (576p): f_H 31.25 kHz; f_V 50 Hz,
		750 (720)/60p: f_H 45.00 kHz; f_V 60 Hz,
		750 (720)/50p: f_H 37.50 kHz; f_V 50 Hz,
		1125 (1080)/60i: f_H 33.75 kHz; f_V 60 Hz,
		1125 (1080)/50i: f_H 28.13 kHz; f_V 50 Hz,
		1125 (1080)/24p: f_H 27.00 kHz; f_V 24 Hz,
		1125 (1080)/60p: f_H 67.50 kHz; f_V 60 Hz,
		1125 (1080)/50p: f_H 56.25 kHz; f_V 50 Hz
	Video/S-Video	f_H: 15.75 kHz, f_V: 60 Hz [NTSC/NTSC4.43/PAL-M/PAL60]
		f_H: 15.63 kHz, f_V: 50 Hz [PAL/PAL-N/SECAM]
Optical axis shift*6		Vertical: ±65%, horizontal: ±26%
Keystone correction range		Vertical: approx. ±30°
Installation		Ceiling/desk, front/rear (menu selection)
On-screen menu languages		English, French, German, Spanish, Italian, Chinese, Korean, Russian, Swedish, Danish, Norwegian, Polish, Czech, Hungarian, Portuguese, Thai, Japanese
Terminals	HDMI IN	HDMI connector × 2, HDMI™ (Deep Color, x.v.Color™*7, CEC*8), HDCP compliant, supports HDAVI Control Version 5
	COMPUTER (RGB) IN	D-sub HD 15-pin (female) × 1
	RGB signal	R, G, B: 0.7 Vp-p (1.0 Vp-p for sync on G), 75 ohms, HD/SYNC, VD: TTL (positive/negative polarity compatible) **NOTE: HD/SYNC, and VD terminals do not accept tri-level sync signals.**
	YP_BP_R/YC_BC_R signal	Y: 1.0 Vp-p (including sync signal), P_B/P_R: 0.7 Vp-p, 75 ohms
	COMPONENT IN	RCA pin (Y, P_BP/C_B, P_R/C_R) × 3
	Y	1.0 Vp-p, 75 ohms,
	P_B/C_B, P_R/C_R	0.7 Vp-p, 75 ohms
	TRIGGER IN / TRIGGER OUT	M3 jack × 2 12 V, max. 100 mA (input/output selectable using on-screen menu)
	VIDEO IN	RCA pin × 1, 1.0 Vp-p, 75 ohms
	S-VIDEO IN	Mini DIN 4-pin × 1, Y: 1.0 Vp-p, C: 0.286 Vp-p, 75 ohms
	SERIAL IN	D-sub 9-pin × 1 for external control (RS-232C compliant)
Power cord length		3.0 m (9 ft 10 in)
Cabinet materials		Molded plastic (PC+ABS)
Dimensions (W × H × D)		470 mm × 151 mm × 380 mm*9 (18-17/32″ × 5-15/16″ × 14-31/32″)*9
Weight*10		Approx. 8.6 kg (19.0 lbs)
Operation noise*3		29 dB (lamp power: eco)
Operating temperature		0°–40°C (32°–104°F)
Operating humidity		20%–80% (no condensation)

Remote control unit

Power supply	3 V DC (AA/R6 type battery × 2)
Operation range*11	Approx. 7 m (23 ft) when operated from directly in front of the signal receptor
Dimensions (W × H × D)	48 × 138 × 28 mm (1-7/8″ × 5-7/16″ × 1-3/32″)
Weight	Approx. 125 g (4.4 oz) (including batteries)

Supplied accessories

Power cord (× 1) (× 2 for PT-AR100EA)
Wireless remote control unit (× 1)
Batteries for remote control (AA/R6 type × 2)
Lens cover (× 1)

Optional accessories

Replacement lamp unit	ET-LAA110
Ceiling mount bracket	ET-PKA110H (for high ceilings) ET-PKA110S (for low ceilings)

Weights and dimensions shown are approximate. Specifications and appearance are subject to change without notice.

***1 The projector uses a type of liquid crystal panel that typically consists of millions of pixels. This panel is built with very high-precision technology to provide the finest possible image. Occasionally, a few pixels may remain turned on (bright) or turned off (dark). Please note that this is an intrinsic characteristic of the manufacturing technology that affects all products using LCD technology.**
***2 The projector uses a high-voltage mercury lamp that contains high internal pressure. This lamp may break, emitting a large sound, or fail to illuminate, due to impact or extended use. The length of time that it takes for the lamp to break or fail to illuminate varies greatly depending on individual lamp characteristics and usage conditions.**
***3 Measurement, measuring conditions, and method of notation all comply with ISO 21118 international standards.**
***4 In dynamic mode, with dynamic iris on.**
***5 In cinema 1 mode, with dynamic iris on.**
***6 Shift range is limited during simultaneous horizontal and vertical shifting.**
***7 Effective in Rec. 709 picture mode.**
***8 CEC is an abbreviation for Consumer Electronics Control. Operation may not be possible with some connected equipment or settings.**
***9 With legs at shortest position.**
***10 Average value. May differ depending on models.**
***11 Operation range differs depending on environments.**

Dimensions

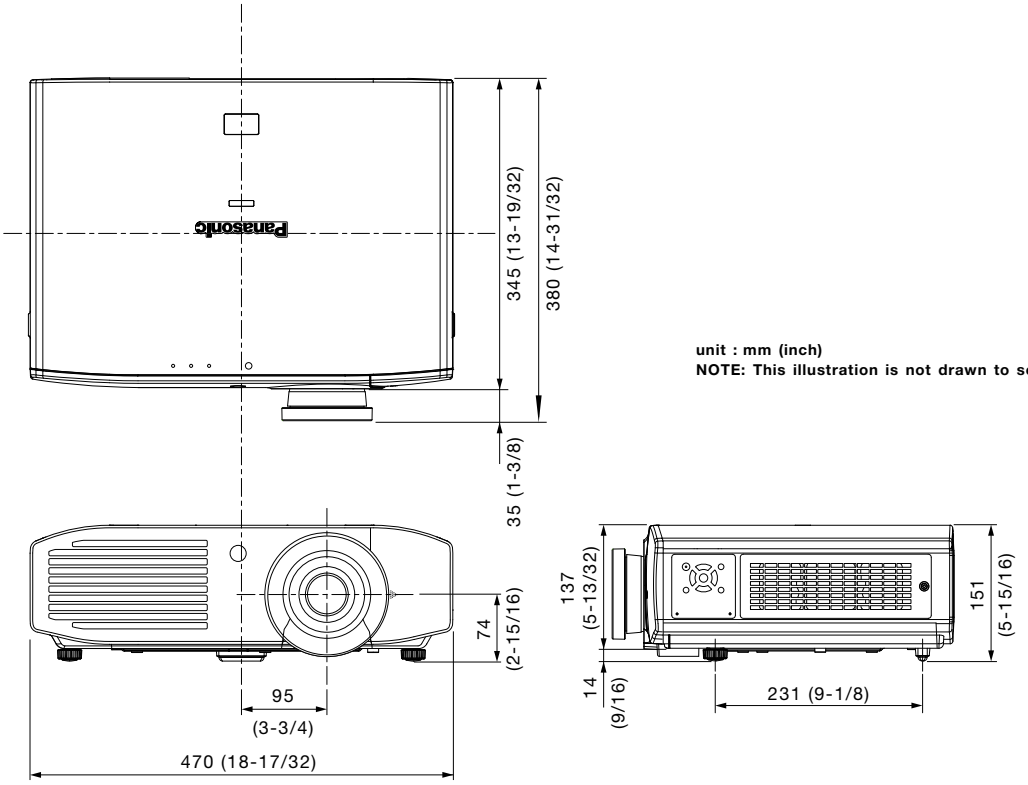

unit : mm (inch)
NOTE: This illustration is not drawn to scale.

Terminals

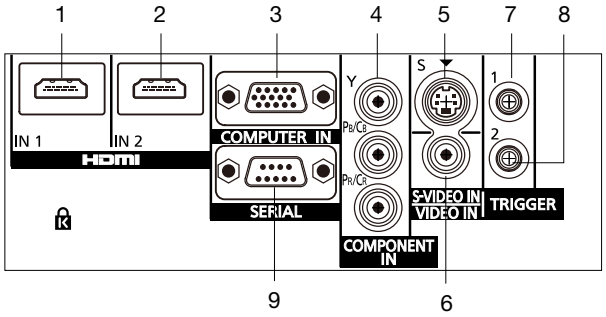

1 HDMI 1 input
2 HDMI 2 input
3 Computer input
4 Component (YPBPR/YCBCR) input
5 S-Video input
6 Video input
7 Trigger input / Trigger output 1
8 Trigger input / Trigger output 2
9 Serial input

Standard setting-up position

unit : mm (inch)

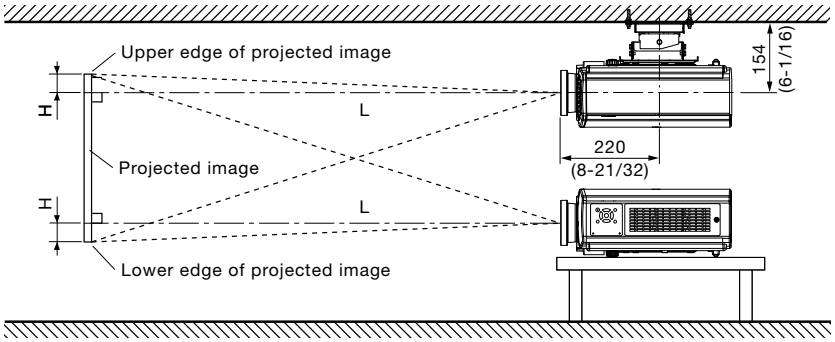

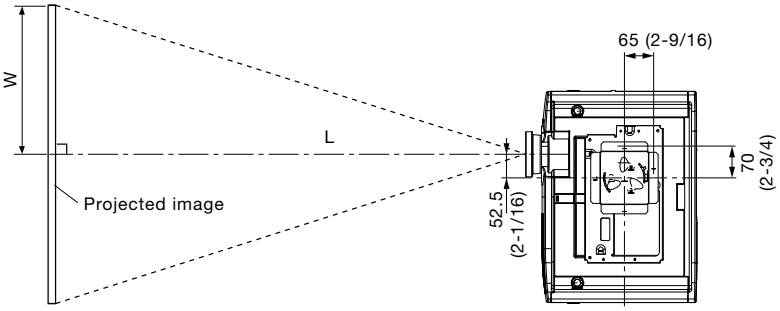

NOTE:

Illustrations show the projector installed using optional ceiling mount bracket ET-PKA110S.

This illustration is not drawn to scale.

Caution:

- All construction work should be done by a qualified technician.
- When mounting to the ceiling, use the special mounting bracket. To prevent the projector from swaying or dropping, attach the wire that is included with the projector between the mounting bracket and the ceiling.

Projection distance for 16:9 aspect ratio screen

Projection size (16:9)	Projection distance (L)		Height from the edge of screen to center of lens (H)	Width from the right edge of screen to center of lens (W)
Diagonal length	Min (Wide)	Max (Telephoto)		
1.02 m / 40″	1.11 m / 3′8″	2.29 m / 7′6″	-0.08 m – 0.58 m / -3″ – 1′11″	0.21 m – 0.68 m / 8″ – 2′3″
1.27 m / 50″	1.41 m / 4′8″	2.87 m / 9′5″	-0.09 m – 0.71 m / -4″ – 2′4″	0.27 m – 0.84 m / 11″ – 2′9″
1.52 m / 60″	1.70 m / 5′7″	3.46 m / 11′4″	-0.11 m – 0.86 m / -4″ – 2′10″	0.32 m – 1.01 m / 1′1″ – 3′4″
1.78 m / 70″	1.99 m / 6′6″	4.04 m / 13′3″	-0.13 m – 1.00 m / -5″ – 3′3″	0.37 m – 1.18 m / 1′3″ – 3′10″
2.03 m / 80″	2.28 m / 7′6″	4.62 m / 15′2″	-0.15 m – 1.15 m / -6″ – 3′9″	0.42 m – 1.35 m / 1′5″ – 4′5″
2.29 m / 90″	2.57 m / 8′5″	5.21 m / 17′1″	-0.17 m – 1.29 m / -7″ – 4′3″	0.48 m – 1.51 m / 1′7″ – 4′11″
2.54 m / 100″	2.87 m / 9′5″	5.79 m / 19′0″	-0.19 m – 1.44 m / -7″ – 4′9″	0.53 m – 1.68 m / 1′9″ – 5′6″
3.05 m / 120″	3.45 m / 11′4″	6.96 m / 22′10″	-0.22 m – 1.71 m / -9″ – 5′7″	0.64 m – 2.02 m / 2′1″ – 6′8″
3.81 m / 150″	4.33 m / 14′2″	8.70 m / 28′7″	-0.28 m – 2.15 m / -11″ – 7′1″	0.80 m – 2.52 m / 2′7″ – 8′3″
5.08 m / 200″	5.79 m / 19′0″	11.62 m / 38′1″	-0.37 m – 2.86 m / -1′3″ – 9′5″	1.06 m – 3.37 m / 3′6″ – 11′1″
6.35 m / 250″	7.25 m / 23′9″	14.53 m / 47′8″	-0.47 m – 3.58 m / -1′7″ – 11′9″	1.33 m – 4.20 m / 4′4″ – 13′9″
7.62 m / 300″	8.71 m / 28′7″	17.45 m / 57′3″	-0.56 m – 4.30 m / -1′10″ – 14′1″	1.59 m – 5.05 m / 5′3″ – 16′7″

NOTE: The values of L shown above vary due to characteristics of the zoom lens. Images may slightly distort due to characteristics of the zoom lens when the zoom lens is set to the minimum throw distance.

Calculation of the projection distance

For a screen size different from the above, use the equation below to calculate the projection distance.

16:9	minimum	L (m) = (diagonal screen size in inches) × 0.0292 - 0.054
	maximum	L (m) = (diagonal screen size in inches) × 0.0583 - 0.041

NOTE: The accuracy of calculated value by the formula shown above is ±5%.

Shift range

Optical axis shift function allows to shift the position of a projected image as shown below.

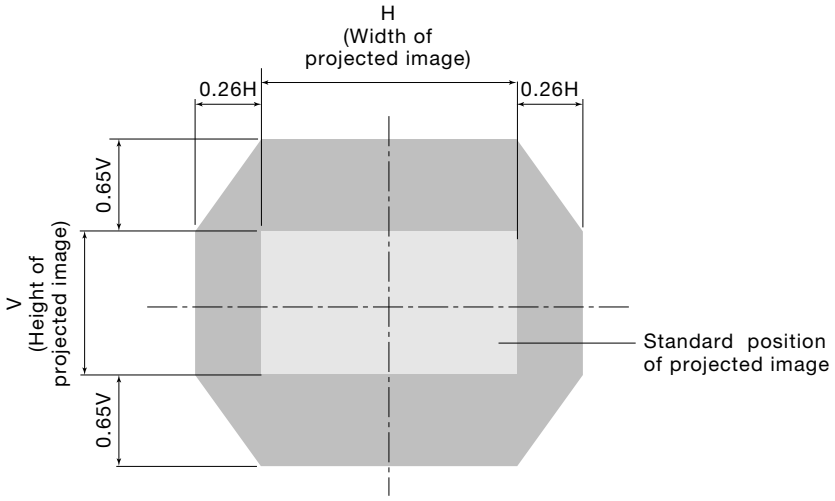

Installable angle

Install the projector at an angle within the range shown below.

• **Vertical direction**
The projector may be installed at a vertical angle of ±30°.

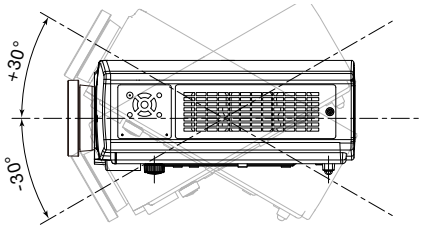

• **Horizontal direction**
The projector may be installed at a horizontal angle of ±10°.

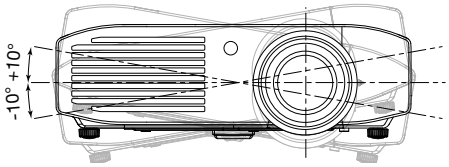

List of compatible signals

The signals that can be input to this projector are shown in the table below. Horizontal scanning frequencies of 15 kHz to 74 kHz, vertical scanning frequencies of 24 Hz to 85 Hz, and a dot clock of 154 MHz maximum can be input.

Compatible signal	Display mode	Display resolution (dots)*1	Scanning frequency H (kHz)	Scanning frequency V (kHz)	Dot clock frequency (MHz)	Format	Plug-and-play HDMI
NTSC/NTSC4.43/PAL-M/PAL60	-	720 × 480i	15.7	59.9	-	VIDEO/S-VIDEO	–
PAL/PAL-N/SECAM	-	720 × 576i	15.6	50.0	-		–
525i (480i)	480i	720 × 480i	15.7	59.9	13.5	RGB/YPBPR	–
625i (576i)	576i	720 × 576i	15.6	50.0	13.5		–
525p (480p)	480p	720 × 483	31.5	59.9	27.0	RGB/YCBCR/HDMI	Yes
625p (576p)	576p	720 × 576	31.3	50.0	27.0		Yes
750 (720)/60p	720/60p	1,280 × 720	45.0	60.0	74.3	RGB/YPBPR/HDMI	Yes
750 (720)/50p	720/50p	1,280 × 720	37.5	50.0	74.3		Yes
1125 (1080)/60i	1080/60i	1,920 × 1,080i	33.8	60.0	74.3		Yes
1125 (1080)/50i	1080/50i	1,920 × 1,080i	28.1	50.0	74.3		Yes
1125 (1080)/24p	1080/24p	1,920 × 1,080	27.0	24.0	74.3		Yes
1125 (1080)/60p	1080/60p	1,920 × 1,080	67.5	60.0	148.5		Yes
1125 (1080)/50p	1080/50p	1,920 × 1,080	56.3	50.0	148.5		Yes
VGA	VGA60	640 × 480	31.5	59.9	25.2	RGB	–
	VGA75	640 × 480	37.5	75.0	31.5		–
	VGA85	640 × 480	43.3	85.0	36.0		–
SVGA	SVGA56	800 × 600	35.2	56.3	36.0		–
	SVGA60	800 × 600	37.9	60.3	40.0		–
	SVGA72	800 × 600	48.1	72.2	50.0		–
	SVGA75	800 × 600	46.9	75.0	49.5		–
	SVGA85	800 × 600	53.7	85.1	56.3		–
XGA	XGA60	1,024 × 768	48.4	60.0	65.0		–
	XGA70	1,024 × 768	56.5	70.1	75.0		–
	XGA75	1,024 × 768	60.0	75.0	78.8		–
	XGA85	1,024 × 768	68.7	85.0	94.5		–
MXGA	MXGA70	1,152 × 864	64.0	71.2	94.2		–
	MXGA75	1,152 × 864	67.5	74.9	108.0		–
1280 × 720	1280 × 720/60	1,280 × 720	44.8	59.9	74.5		–
1280 × 768	1280 × 768/60	1,280 × 768	47.8	59.9	79.5		–
1280 × 800	1280 × 800/60	1,280 × 800	49.7	59.8	83.5		–
SXGA	SXGA60	1,280 × 1,024	64.0	60.0	108.0		–
SXGA+	SXGA+60	1,400 × 1,050	65.2	60.0	122.6		–
WXGA+	WXGA+60	1,440 × 900	55.9	59.9	106.5		–
1920 × 1080	1920 × 1080/60	1,920 × 1,080*2	66.6	59.9	138.5		–
	1920 × 1080/50	1,920 × 1,080	55.6	49.9	141.5		–
WUXGA	WUXGA60RB	1,920 × 1,200*2	74.0	60.0	154.0		–

***1 The "i" appearing after the resolution indicates an interlaced signal.**
***2 Compliant with VESA CVT-RB (Coordinated Video Timing-Reduced Blanking).**

Serial connector

The serial connector complies with RS-232C. To control the projector from a personal computer, commands must be input through communication software, based on the format and satisfying the communication conditions shown below.

Pin assignments and signal names

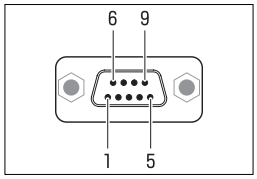

D-sub 9-pin (female) Serial input

No.	Signal name	Description	No.	Signal name	Description
1	–	NC	6	–	NC
2	TXD	Transmitted data	7	RTS	Connected internally
3	RXD	Received data	8	CTS	Connected internally
4	–	NC	9	–	NC
5	GND	Ground			

Communication conditions (factory setting)

Signal level	RS-232C-compliant
Synchronization method	Start-stop synchronization
Baud rate	9,600 bps
Parity	None
Character length	8 bits
Stop bit	1 bit
X parameter	None
S parameter	None

Basic format

Transmission from the computer begins with STX, then command, parameter, and ETX are sent in this order. Add parameters according to the details of control.

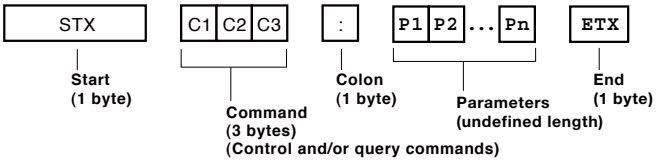

CAUTION

- **When sending multiple commands, be sure to send the next command after receiving a response from the projector.**
- **STX and ETX are character codes. Expressed in hexidecimals, STX is 02 and ETX is 03.**

Cable specifications

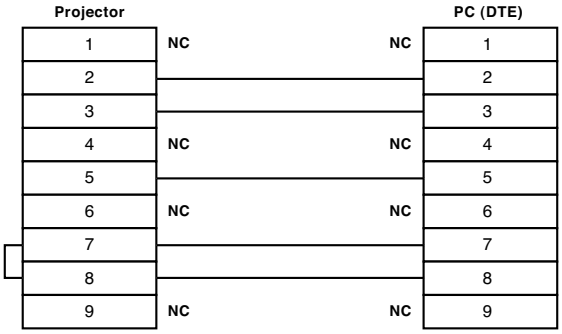

Control commands

Command	Function	Parameter
PON*1	Standby power on	–
POF*1	Standby power off	–
IIS	Input signal selection	CP1, SVD, VID, HD1, HD2, HD3, RG1
OMN	Menu	–
OEN	Enter	–
OBK	Return	–
OCU	Cursor up	–
OCD	Cursor down	–
OCL	Cursor left	–
OCR	Cursor right	–
OST	Default	–
OFZ	Freeze	0, 1
FC1	The same function as “FUNCTION” button	–
OSH*2	Blank on/off	–
OVM	Picture mode switch	–
OWM	Waveform monitor activate/off	0, 1, 2, 3, 4, 5, 6, 7, 8
VS1	Aspect switch	–
VPM	Picture mode	NOR, DYN, GM1, SPT, 709, CN1, VCN
OOT	Off timer	0, 1, 2, 3, 4, 5, 6, 7
OEC	The same function as “ECO” button	–
OMM	The same function as “MEMORY LOAD” button	–
DPA	The same function as “PICTURE ADJUSTMENT” button	–
DCM	Color management menu	–
OVL	The same function as “VIERA Link” button	–
OSM	The same function as “SUB MENU” button	–

Option Menu Command

VXX	Gamma output level (Y)	AGOS0=010000 – AGOS0=090255
	Gamma output level (R)	AGOS1=010000 – AGOS1=090255
	Gamma output level (G)	AGOS2=010000 – AGOS2=090255
	Gamma output level (B)	AGOS3=010000 – AGOS3=090255
	Gamma input level	AGIS0=01000 – AGOS0=09100
	Trigger 1 output	TROI0=+00000 – TROI0=+00001
	Trigger 2 output	TROI1=+00000 – TROI1=+00001

***1 PON is the only command that is effective in standby mode; all other commands are invalid. The PON command is not accepted during lamp on control. After the lamp has been turned off and while the cooling fan is still operating, lamp on control will not be activated for about 85 seconds in order to protect the lamp.**

***2 Do not send OSH commands continuously in a short period of time. Doing so may burst the lamp or shorten the lamp replacement cycle.**

Control command parameters

Command	Size (Byte)	Parameter
IIS	3	CP1 = component, SVD = S-video, VID = video, HD1 = HDMI1, HD2 = HDMI2, RG1 = computer
OFZ	1	0 = off, 1 = on
OWM	1	0 = off, 1 = full scan (Y), 2 = full scan (R), 3 = full scan (G), 4 = full scan (B), 5 = single line scan (Y), 6 = single line scan (R), 7 = single line scan (G), 8 = single line scan (B)
VPM	3	NOR = normal, DYN = dynamic, GM1 = game 1, SPT = sports, 709 = Rec. 709, CN1 = cinema 1, VCN = vivid cinema
OOT	1	4 = 150 min, 5 = 180 min, 6 = 210 min, 7 = 240 min
QVX:AGOS0	6	AGOS0=p1p2d1d2d3d4 p1p2 = point number: 01 – 09, d1d2d3d4 = output: 0000 – 0255
AGOS1	6	AGOS1=p1p2d1d2d3d4 p1p2 = point number: 01 – 09, d1d2d3d4 = output: 0000 – 0255
AGOS2	6	AGOS2=p1p2d1d2d3d4 p1p2 = point number: 01 – 09, d1d2d3d4 = output: 0000 – 0255
AGOS3	6	AGOS3=p1p2d1d2d3d4 p1p2 = point number: 01 – 09, d1d2d3d4 = output: 0000 – 0255
AGIS0	5	AGIS0=p1p2d1d2d3 p1p2 = point number: 01 – 09, d1d2d3 = output: 001 – 099
TROI0	6	TROI0=+00000 = low, TROI0=+00001 = high
TROI1	6	TROI1=+00000 = low, TROI1=+00001 = high

Status request commands

Command	Description	Parameter
QPW	Standby power status	000 = off, 001 = on
QIN	Input signal status	CP1 = component, SVD = S-video, VID = video, HD1 = HDMI1, HD2 = HDMI2, RG1 = computer
QPM	Picture mode status	NOR = normal, DYN = dynamic, GM1 = game 1, SPT = sports, 709 = Rec. 709, CN1 = cinema 1, VCN = vivid cinema
QSH	Blank function status	0 = off, 1 = on
QFZ	Freeze function status	0 = off, 1 = on
QOT	Off timer status	0 = off, 1 = 60 min, 2 = 90 min, 3 = 120 min, 4 = 150 min, 5 = 180 min, 6 = 210 min, 7 = 240 min
QWM	Waveform monitor statusutton	0 = off, 1 = full scan (Y), 2 = full scan (R), 3 = full scan (G), 4 = full scan (B), 5 = single line scan (Y), 6 = single line scan (R), 7 = single line scan (G), 8 = single line scan (B)

Option Menu Command		
QVX:AGOS0=p1p2	Gamma output level (Y)	AGOS0= p1p2d1d2d3d4 p1p2 = point number: 01 - 09 d1d2d3d4 = output: 0000 - 0255
AGOS1=p1p2	Gamma output level (R)	AGOS1= p1p2d1d2d3d4 p1p2 = point number: 01 - 09 d1d2d3d4 = output: 0000 - 0255
AGOS2=p1p2	Gamma output level (G)	AGOS2= p1p2d1d2d3d4 p1p2 = point number: 01 - 09 d1d2d3d4 = output: 0000 - 0255
AGOS3=p1p2	Gamma output level (B)	AGOS3= p1p2d1d2d3d4 p1p2 = point number: 01 - 09 d1d2d3d4 = output: 0000 - 0255
AGIS0=p1p2	Gamma input level	AGIS0= p1p2d1d2d3 p1p2 = point number: 01 - 09 d1d2d3 = input: 001 - 099

NOTE: If a wrong command is received, the projector will send an ER401 or ER402 command to the computer.

Command example

To set the input to HDMI 1, send the command as shown below.

STX	IIS	:	HD1	ETX
Start	Command		Parameter	End

NOTE: When sending commands without parameters, a colon (:) is not necessary.

Notes on projector placement and operation

The projector uses a high-wattage lamp that becomes very hot during operation. Please observe the following precautions.

1. Never place objects on top of the projector while it is operating.
2. Make sure there is an unobstructed space of 100 mm (3-15/16˝) or more around the projector's air intake openings.
3. If the projector is placed in a box or enclosure, ensure the temperature of the air surrounding the projector is between 0°C and 35°C (32°F and 95°F). Also make sure the projector's intake and exhaust openings are not blocked. Take particular care to ensure that hot air from the exhaust openings is not sucked into the intake openings.

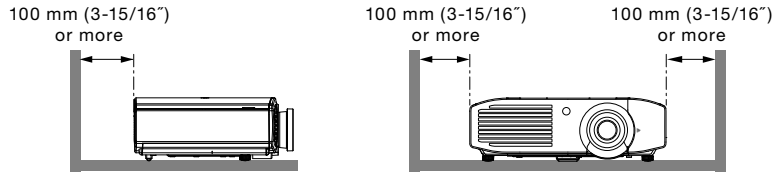

Direction of air intake and exhaust

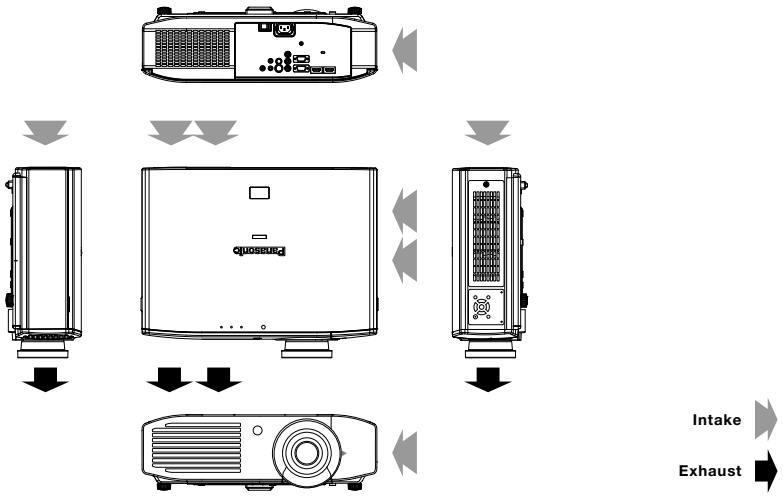

Operating the projector continuously

1. If the projector is to be operated continuously 6 hours or more, lamp replacement cycle duration becomes shorter.
2. The lamp replacement cycle duration becomes shorter if the projector is operated repeatedly for short periods.

Weights and dimensions shown are approximate. Specifications and appearance are subject to change without notice.
Product availability differs depending on region and country. This product may be subject to export control regulations.

All other trademarks are the property of their respective trademark owners.